Powder metal straight fluted taps for cast iron and aluminium die cast

VP(O)-DC-MT SERIES

Volume 3

KEY FEATURE: VP(O)-DC-MT SERIES

1. Synchro taps when speed can be > 30 m/min
2. Highly wear resistant powder metal substrate
3. Straight flute, high rigidity
4. Also available with oil hole

PERFORMANCE

GGG40 Emulsion

Tool	OIL-VP-DC-MT (M16x1,5)
Tapping Length	26 mm (Blind & Through holes)
Tapping Speed	40 m/min (800U/min)
Coolant	Emulsion
Machine	Vertical Machining Center

Tool Life

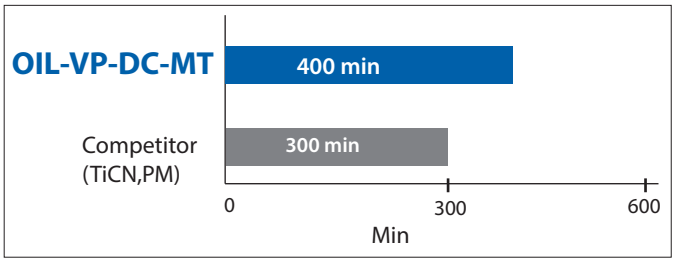

GG25 Dry Tapping

Tool	VP-DC-MT (M10x1,5)
Tapping Length	18 mm
Tapping Speed	49 m/min (1.560U/min)
Coolant	Dry
Machine	Vertical Machining Center

Tool Life (holes)

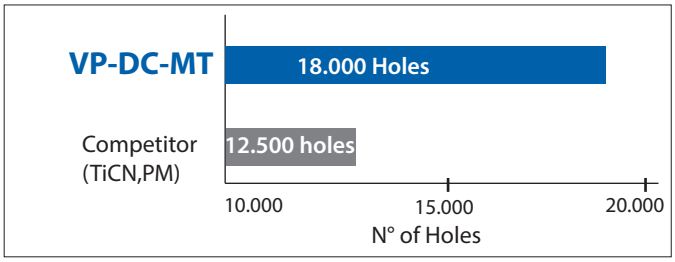

ADC Emulsion

Tool	VP-DC-MT (M10x1,5)
Tapping Length	30 mm
Tapping Speed	30 m/min (955U/min)
Coolant	Emulsion
Machine	Vertical Machining Center

Tool Life (holes)

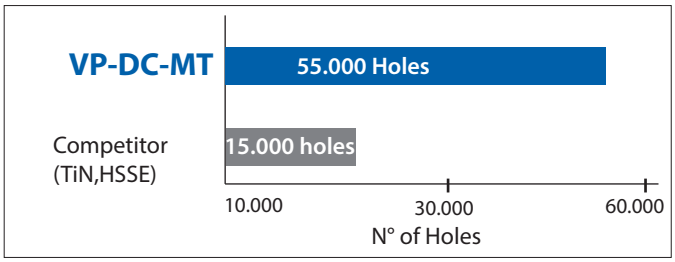

VP-DC-MT

Threading | Cutting taps | Metric

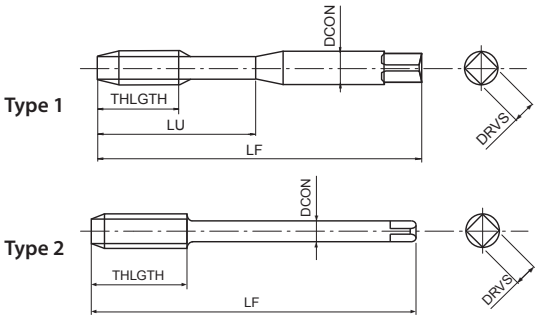

- Powder metal straight flute cutting tap for through and blind holes
- Multilayer TiCN coating
- For cast iron and aluminium cast
- Synchro taps at cutting speeds > 30 m/min

P	P	K	K	N	H	H	
C ≥ 0,45%	SCM	GG	GGG	AC, ADC	25-35 HRC	35-45 HRC	
10-25	10-20	15-60	15-40	25-70	8-20	8-20	m/min

M | PM | V | ISO 2 6HX | C/2,5 | DIN 371 | DIN 376

EDP	TD	TP	LF	THLGTH	LU	DCON	DRVS	NOF	Type	DIN
48020125	2	0,4	45	8	10	2,8	2,1	3	1	371
48020133	2,5	0,45	50	9	14	2,8	2,1	3	1	371
48020138	3	0,5	56	6	18	3,5	2,7	3	1	371
48020142	3,5	0,6	56	7	20	4	3	3	1	371
48020144	4	0,7	63	9	21	4,5	3,4	3	1	371
48020149	5	0,8	70	10	25	6	4,9	3	1	371
48020155	6	1	80	12	30	6	4,9	3	1	371
48020158	7	1	80	12	30	7	5,5	4	1	371
48020161	8	1,25	90	15	35	8	6,2	4	1	371
48020169	10	1,5	100	18	39	10	8	4	1	371
48020175	11	1,5	100	18	-	8	6,2	4	2	376
48020179	12	1,75	110	21	-	9	7	4	2	376
48022191	14	2	110	24	-	11	9	4	2	376
48022202	16	2	110	24	-	12	9	4	2	376
48022214	18	2,5	125	30	-	14	11	4	2	376
48022228	20	2,5	140	30	-	16	12	4	2	376
48020238	22	2,5	140	30	-	18	14,5	5	2	376
48020247	24	3	160	36	-	18	14,5	5	2	376
48020271	30	3,5	180	42	-	22	18	6	2	376

VP-DC-MT FORM E

Threading | Cutting taps | Metric

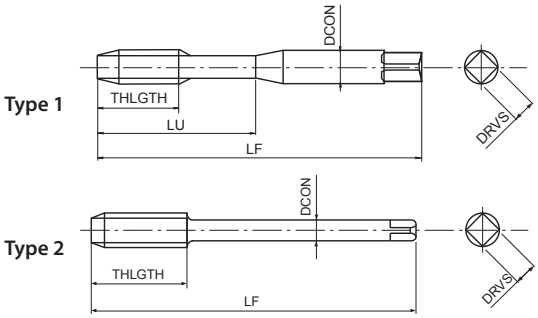

- Powder metal straight flute cutting tap for through and blind holes
- Multilayer TiCN coating
- For cast iron and aluminium cast
- Synchro taps at cutting speeds > 30 m/min, chamfer Form E

P ○	P ○	K ◉	K ◉	N ◉	H ○	H ○	
C ≥ 0,45%	SCM	GG	GGG	AC, ADC	25-35 HRC	35-45 HRC	
10-25	10-20	15-60	15-40	25-70	8-20	8-20	m/min

M	PM	V	ISO 2 6HX	E/1,5	≥2D		DIN 371	DIN 376

EDP	TD	TP	LF	THLGTH	LU	DCON	DRVS	NOF	Type	DIN
48037138	3	0,5	56	6	18	3,5	2,7	3	1	371
48037144	4	0,7	63	9	21	4,5	3,4	3	1	371
48037149	5	0,8	70	10	25	6	4,9	3	1	371
48037155	6	1	80	12	30	6	4,9	3	1	371
48037161	8	1,25	90	15	35	8	6,2	4	1	371
48037169	10	1,5	100	18	39	10	8	4	1	371
48037179	12	1,75	110	21	-	9	7	4	2	376
48037191	14	2	110	24	-	11	9	4	2	376
48037202	16	2	110	24	-	12	9	4	2	376
48037214	18	2,5	125	30	-	14	11	4	2	376
48037228	20	2,5	140	30	-	16	12	4	2	376
48037238	22	2,5	140	30	-	18	14,5	5	2	376
48037247	24	3	160	36	-	18	14,5	5	2	376

VPO-DC-MT Centre

Threading | Cutting taps | Metric

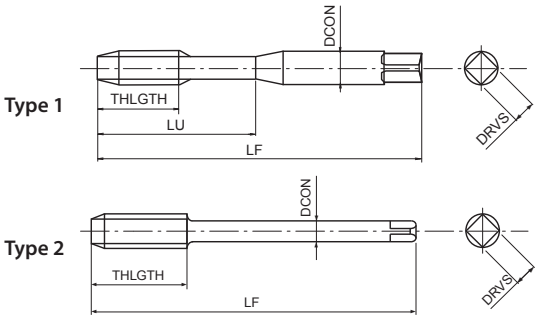

- Powder metal straight flute cutting tap for blind holes
- Multilayer TiCN coating
- For cast iron and aluminium cast
- Synchro taps at cutting speeds > 30 m/min, with centre through coolant

P	P	K	K	N	H	H	
C ≥ 0,45%	SCM	GG	GGG	AC, ADC	25-35 HRC	35-45 HRC	
10-25	10-20	15-60	15-40	25-70	8-20	8-20	m/min

M | PM | V | ISO 2 6HX | C/2,5 | ≥2D | DIN 371 | DIN 376

EDP	TD	TP	LF	THLGTH	LU	DCON	DRVS	NOF	Type	DIN
48021155	6	1	80	12	30	6	4,9	3	1	371
48021161	8	1,25	90	15	35	8	6,2	4	1	371
48021169	10	1,5	100	18	39	10	8	4	1	371
48300179	12	1,75	110	21	-	9	7	4	2	376
48300191	14	2	110	24	-	11	9	4	2	376
48300202	16	2	110	24	-	12	9	4	2	376
48300214	18	2,5	125	30	-	14	11	4	2	376
48300228	20	2,5	140	30	-	16	12	4	2	376

VPO-DC-MT Side

Threading | Cutting taps | Metric

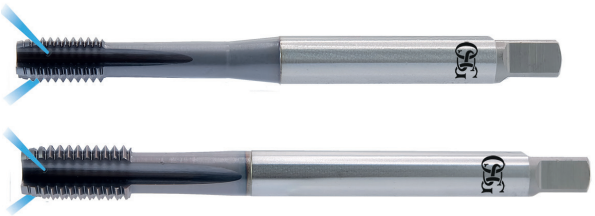

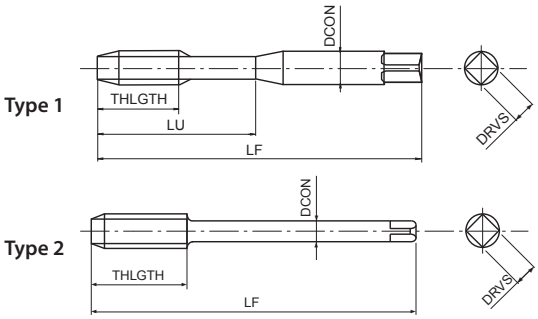

- Powder metal straight flute cutting tap for through holes
- Multilayer TiCN coating
- For cast iron and aluminium cast
- Synchro taps at cutting speeds > 30 m/min, with side through coolant

P ○	P ○	K ◉	K ◉	N ◉	H ○	H ○	
C ≥ 0,45%	SCM	GG	GGG	AC, ADC	25-35 HRC	35-45 HRC	
10-25	10-20	15-60	15-40	25-70	8-20	8-20	m/min

M | PM | V | ISO 2 6HX | C/2,5 | DIN 371 | DIN 376

EDP	TD	TP	LF	THLGTH	LU	DCON	DRVS	NOF	Type	DIN
48299155	6	1	80	8	30	6	4,9	3	1	371
48299161	8	1,25	90	10	35	8	6,2	4	1	371
48299169	10	1,5	100	12	39	10	8	4	1	371
48021179	12	1,75	110	21	-	9	7	4	2	376
48024191	14	2	110	24	-	11	9	4	2	376
48024202	16	2	110	24	-	12	9	4	2	376
48024214	18	2,5	125	30	-	14	11	4	2	376
48024228	20	2,5	140	30	-	16	12	4	2	376

VPO-DC-MT FORM E

Threading | Cutting taps | Metric

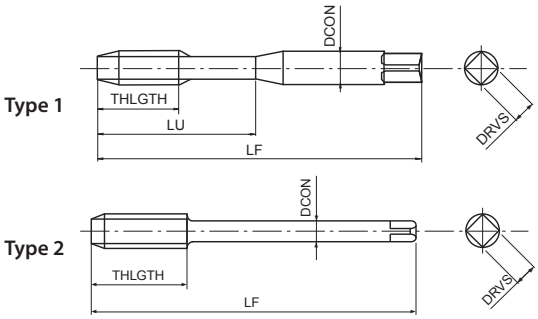

- Powder metal straight flute cutting tap for blind holes
- Multilayer TiCN coating
- For cast iron and aluminium cast
- Synchro taps at cutting speeds > 30 m/min, with centre through coolant, chamfer Form E

P	P	K	K	N	H	H	
C ≥ 0,45%	SCM	GG	GGG	AC, ADC	25-35 HRC	35-45 HRC	
10-25	10-20	15-60	15-40	25-70	8-20	8-20	m/min

M | PM | V | ISO 2 6HX | E/1,5 | ≥2D | DIN 371 | DIN 376

EDP	TD	TP	LF	THLGTH	LU	DCON	DRVS	NOF	Type	DIN
48038155	6	1	80	12	30	6	4,9	3	1	371
48038161	8	1,25	90	15	35	8	6,2	4	1	371
48038169	10	1,5	100	18	39	10	8	4	1	371
48038179	12	1,75	110	21	-	9	7	4	2	376
48038191	14	2	110	24	-	11	9	4	2	376
48038202	16	2	110	24	-	12	9	4	2	376
48038214	18	2,5	125	30	-	14	11	4	2	376
48038228	20	2,5	140	30	-	16	12	4	2	376
48038238	22	2,5	140	30	-	18	14,5	5	2	376
48038247	24	3	160	36	-	18	14,5	5	2	376

VP-DC-MT

Threading | Cutting taps | Metric Fine

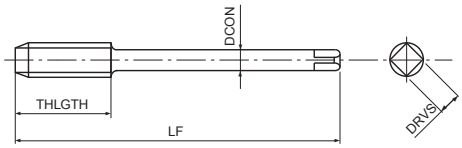

- Powder metal straight flute cutting tap for through and blind holes
- Multilayer TiCN coating
- For cast iron and cast aluminium
- Synchro taps at cutting speeds > 30 m/min

P	P	K	K	N	H	H	
C ≥ 0,45%	SCM	GG	GGG	AC, ADC	25-35 HRC	35-45 HRC	
10-25	10-20	15-60	15-40	25-70	8-20	8-20	m/min

MF | PM | V | ISO 2 6HX | C/2,5 | DIN 374

EDP	TD	TP	LF	THLGTH	DCON	DRVS	NOF	DIN
48023140	3	0,35	56	6	2,2	-	3	374
48023145	4	0,5	63	9	2,8	2,1	3	374
48023151	5	0,5	70	10	3,5	2,7	3	374
48023157	6	0,5	80	12	4,5	3,4	3	374
48023156	6	0,75	80	12	4,5	3,4	3	374
48023163	8	0,75	80	15	6	4,9	4	374
48023162	8	1	90	15	6	4,9	4	374
48023171	10	1	90	18	7	5,5	4	374
48023170	10	1,25	100	18	7	5,5	4	374
48023182	12	1	100	21	9	7	4	374
48023181	12	1,25	100	21	9	7	4	374
48023180	12	1,5	100	21	9	7	4	374
48023192	14	1,5	100	24	11	9	4	374
48023203	16	1,5	100	24	12	9	4	374
48023216	18	1,5	110	30	14	11	4	374
48023230	20	1,5	125	30	16	12	4	374
48023240	22	1,5	125	20	18	14,5	5	374
48023250	24	1,5	140	24	18	14,5	5	374

VPO-DC-MT Centre

Threading | Cutting taps | Metric Fine

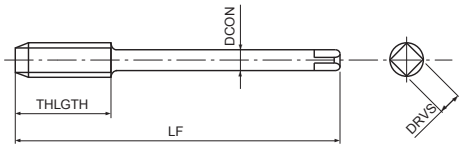

- Powder metal straight flute cutting tap for blind holes
- Multilayer TiCN coating
- For cast iron and cast aluminium
- Synchro taps at cutting speeds > 30 m/min, with centre through coolant

P ○	P ○	K ◉	K ◉	N ◉	H ○	H ○	
C ≥ 0,45%	SCM	GG	GGG	AC, ADC	25-35 HRC	35-45 HRC	
10-25	10-20	15-60	15-40	25-70	8-20	8-20	m/min

MF | PM | V | ISO 2 6HX | C/2,5 | ≥2D | | DIN 374

EDP	TD	TP	LF	THLGTH	DCON	DRVS	NOF	DIN
48024162	8	1	90	15	6	4,9	4	374
48024171	10	1	90	18	7	5,5	4	374
48024170	10	1,25	100	18	7	5,5	4	374
48300181	12	1,25	100	21	9	7	4	374
48300180	12	1,5	100	21	9	7	4	374
48300192	14	1,5	100	24	11	9	4	374
48300203	16	1,5	100	24	12	9	4	374
48300216	18	1,5	110	30	14	11	4	374
48300230	20	1,5	125	30	16	12	4	374

VPO-DC-MT Side

Threading | Cutting taps | Metric Fine

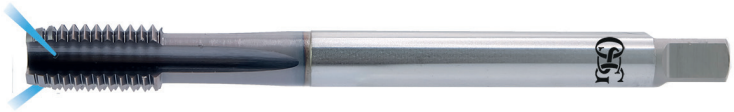

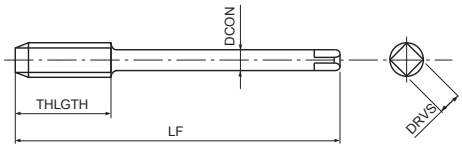

- Powder metal straight flute cutting tap for through holes
- Multilayer TiCN coating
- For cast iron and cast aluminium
- Synchro taps at cutting speeds > 30 m/min, with side through coolant

P ○	P ○	K ◉	K ◉	N ◉	H ○	H ○	
C ≥ 0,45%	SCM	GG	GGG	AC, ADC	25-35 HRC	35-45 HRC	
10-25	10-20	15-60	15-40	25-70	8-20	8-20	m/min

MF | PM | V | ISO 2 6HX | C/2,5 | DIN 374

EDP	TD	TP	LF	THLGTH	DCON	DRVS	NOF	DIN
48299162	8	1	90	15	6	4,9	4	374
48299171	10	1	90	18	7	5,5	4	374
48299170	10	1,25	100	18	7	5,5	4	374
48024181	12	1,25	100	21	9	7	4	374
48024180	12	1,5	100	21	9	7	4	374
48024192	14	1,5	100	24	11	9	4	374
48024203	16	1,5	100	24	12	9	4	374
48024216	18	1,5	110	30	14	11	4	374
48024230	20	1,5	125	30	16	12	4	374

VP-DC-MT

Threading | Cutting taps | UNC

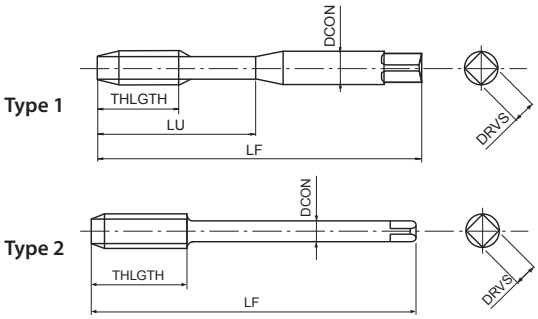

- Powder metal straight flute cutting tap for through and blind holes
- Multilayer TiCN coating
- For cast iron and cast aluminium
- Synchro taps at cutting speeds > 30 m/min

P	P	K	K	N	H	H	
C ≥ 0,45%	SCM	GG	GGG	AC, ADC	25-35 HRC	35-45 HRC	
10-25	10-20	15-60	15-40	25-70	8-20	8-20	m/min

UNC | PM | V | ANSI 2BX | C/2,5 | DIN 2184-1 | DIN 2184-1

EDP	TD	TP	LF	THLGTH	LU	DCON	DRVS	NOF	Type	DIN
48020453	2	56	45	9	14	2,8	2,1	3	1	2184-1
48020455	3	48	50	9	14	2,8	2,1	3	1	2184-1
48020457	4	40	56	8	18	3,5	2,7	3	1	2184-1
48020459	5	40	56	8	18	3,5	2,7	3	1	2184-1
48020461	6	32	56	10	20	4	3	3	1	2184-1
48020464	8	32	63	10	21	4,5	3,4	3	1	2184-1
48020466	10	24	70	13	25	6	4,9	3	1	2184-1
48020468	12	24	80	13	30	6	4,9	3	1	2184-1
48020471	1/4	20	80	16	30	7	5,5	3	1	2184-1
48020474	5/16	18	90	17	35	8	6,2	4	1	2184-1
48020479	3/8	16	100	20	39	10	8	4	1	2184-1
48020484	7/16	14	100	22	-	8	6,2	4	2	2184-1
48020489	1/2	13	110	24	-	9	7	4	2	2184-1
48020494	9/16	12	110	26	-	11	9	4	2	2184-1
48020501	5/8	11	110	28	-	12	9	4	2	2184-1
48020515	3/4	10	125	31	-	14	11	4	2	2184-1
48020526	7/8	9	140	34	-	18	14,5	5	2	2184-1
48020538	1	8	160	38	-	18	14,5	5	2	2184-1

VPO-DC-MT FORM E NEW

Threading | Cutting taps | UNC

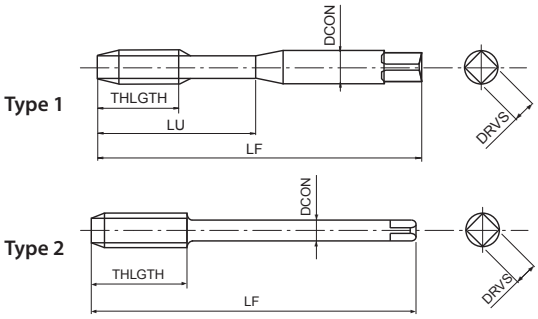

- Powder metal straight flute cutting tap for blind holes
- Multilayer TiCN coating
- For cast iron and aluminium cast
- Synchro taps at cutting speeds > 30 m/min, with centre through coolant, chamfer Form E

P ○	P ○	K ◉	K ◉	N ◉	H ○	H ○	
C ≥ 0,45%	SCM	GG	GGG	AC, ADC	25-35 HRC	35-45 HRC	
10-25	10-20	15-60	15-40	25-70	8-20	8-20	m/min

UNC	PM	V	ANSI 2BX	E/1,5	≥2D		DIN 2184-1	DIN 2184-1

EDP	TD	TP	LF	THLGTH	LU	DCON	DRVS	NOF	Type	DIN
48379471	1/4	20	80	16	30	7	5,5	3	1	DIN2184-1
48379474	5/16	18	90	17	35	8	6,2	4	1	DIN2184-1
48379479	3/8	16	100	20	39	10	8	4	1	DIN2184-1
48379484	7/16	14	100	22	-	8	6,2	4	2	DIN2184-1
48379489	1/2	13	110	24	-	9	7	4	2	DIN2184-1
48379494	9/16	12	110	26	-	11	9	4	2	DIN2184-1
48379501	5/8	11	110	28	-	12	9	4	2	DIN2184-1
48379515	3/4	10	125	31	-	14	11	4	2	DIN2184-1
48379526	7/8	9	140	34	-	18	14,5	5	2	DIN2184-1
48379538	1	8	160	38	-	18	14,5	5	2	DIN2184-1

VP-DC-MT

Threading | Cutting taps | UNF

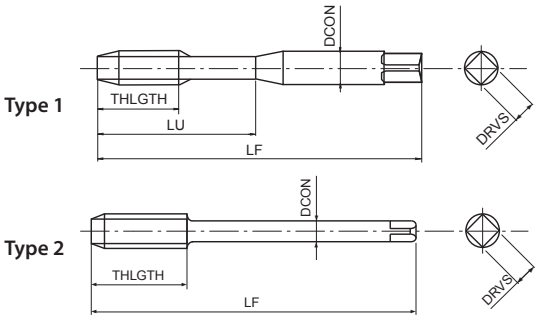

- Powder metal straight flute cutting tap for through and blind holes
- Multilayer TiCN coating
- For cast iron and cast aluminium
- Synchro taps at cutting speeds > 30 m/min

P	P	K	K	N	H	H	
C ≥ 0,45%	SCM	GG	GGG	AC, ADC	25-35 HRC	35-45 HRC	
10-25	10-20	15-60	15-40	25-70	8-20	8-20	m/min

UNF | PM | V | ANSI 2BX | C/2,5 | DIN 2184-1 | DIN 2184-1

EDP	TD	TP	LF	THLGTH	LU	DCON	DRVS	NOF	Type	DIN
48020454	2	64	45	9	14	2,8	2,1	3	1	2184-1
48020456	3	56	50	9	14	2,8	2,1	3	1	2184-1
48020458	4	48	56	8	18	3,5	2,7	3	1	2184-1
48020460	5	44	56	8	18	3,5	2,7	3	1	2184-1
48020462	6	40	56	10	20	4	3	3	1	2184-1
48020465	8	36	63	10	21	4,5	3,4	3	1	2184-1
48020467	10	32	70	13	25	6	4,9	3	1	2184-1
48020469	12	28	80	13	30	6	4,9	3	1	2184-1
48020472	1/4	28	80	16	30	7	5,5	3	1	2184-1
48020476	5/16	24	90	17	35	8	6,2	4	1	2184-1
48020481	3/8	24	90	20	35	10	8	4	1	2184-1
48020486	7/16	20	100	22	-	8	6,2	4	2	2184-1
48020491	1/2	20	100	22	-	9	7	4	2	2184-1
48020496	9/16	18	100	22	-	11	9	4	2	2184-1
48020504	5/8	18	100	22	-	12	9	4	2	2184-1
48020517	3/4	16	110	25	-	14	11	4	2	2184-1
48020528	7/8	14	125	25	-	18	14,5	5	2	2184-1
48020539	1	12	140	28	-	18	14,5	5	2	2184-1

VPO-DC-MT FORM E NEW

Threading | Cutting taps | UNF

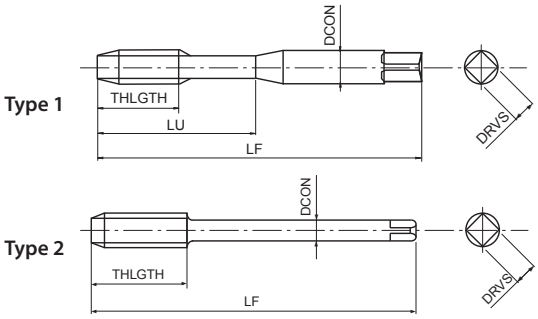

- Powder metal straight flute cutting tap for blind holes
- Multilayer TiCN coating
- For cast iron and aluminium cast
- Synchro taps at cutting speeds > 30 m/min, with centre through coolant, chamfer Form E

P ○	P ○	K ◉	K ◉	N ◉	H ○	H ○	
C ≥ 0,45%	SCM	GG	GGG	AC, ADC	25-35 HRC	35-45 HRC	
10-25	10-20	15-60	15-40	25-70	8-20	8-20	m/min

UNF	PM	V	ANSI 2BX	E/1,5	≥2D		DIN 2184-1	DIN 2184-1

EDP	TD	TP	LF	THLGTH	LU	DCON	DRVS	NOF	Type	DIN
48379472	1/4	28	80	16	30	7	5,5	3	1	DIN2184-1
48379476	5/16	24	90	17	35	8	6,2	4	1	DIN2184-1
48379481	3/8	24	90	20	35	10	8	4	1	DIN2184-1
48379486	7/16	20	100	22	-	8	6,2	4	2	DIN2184-1
48379491	1/2	20	100	22	-	9	7	4	2	DIN2184-1
48379496	9/16	18	100	22	-	11	9	4	2	DIN2184-1
48379504	5/8	18	100	22	-	12	9	4	2	DIN2184-1
48379517	3/4	16	110	25	-	14	11	4	2	DIN2184-1
48379528	7/8	14	125	25	-	18	14,5	5	2	DIN2184-1
48379539	1	12	140	28	-	18	14,5	5	2	DIN2184-1

VP-DC-MT

Threading | Cutting taps | G (BSP)

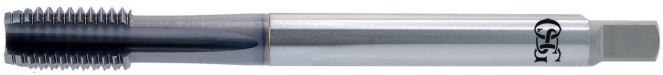

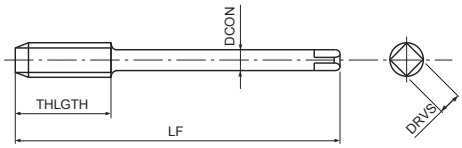

- Powder metal straight flute cutting tap for through and blind holes
- Multilayer TiCN coating
- For cast iron and cast aluminium
- Synchro taps at cutting speeds > 30 m/min

P ○	P ○	K ◉	K ◉	N ◉	H ○	H ○	
C ≥ 0,45%	SCM	GG	GGG	AC, ADC	25-35 HRC	35-45 HRC	
10-25	10-20	15-60	15-40	25-70	8-20	8-20	m/min

G | PM | V | C/2,5 | DIN 5156

EDP	TD	TP	LF	THLGTH	DCON	DRVS	NOF	DIN
48020837	1/16	28	90	11	6	4,9	4	5156
48020838	1/8	28	90	11	7	5,5	4	5156
48020839	1/4	19	100	16	11	9	4	5156
48020840	3/8	19	100	16	12	9	4	5156
48020841	1/2	14	125	22	16	12	5	5156
48020842	5/8	14	125	22	18	14,5	5	5156
48020843	3/4	14	140	22	20	16	5	5156
48020844	7/8	14	150	22	22	18	5	5156
48020845	1	11	160	28	25	20	6	5156
48020846	1 1/8	11	170	28	28	22	6	5156
48020847	1 1/4	11	170	28	32	24	6	5156
48020849	1 1/2	11	190	28	36	29	6	5156
48020850	1 3/4	11	190	28	40	32	6	5156
48020851	2	11	220	28	45	35	6	5156

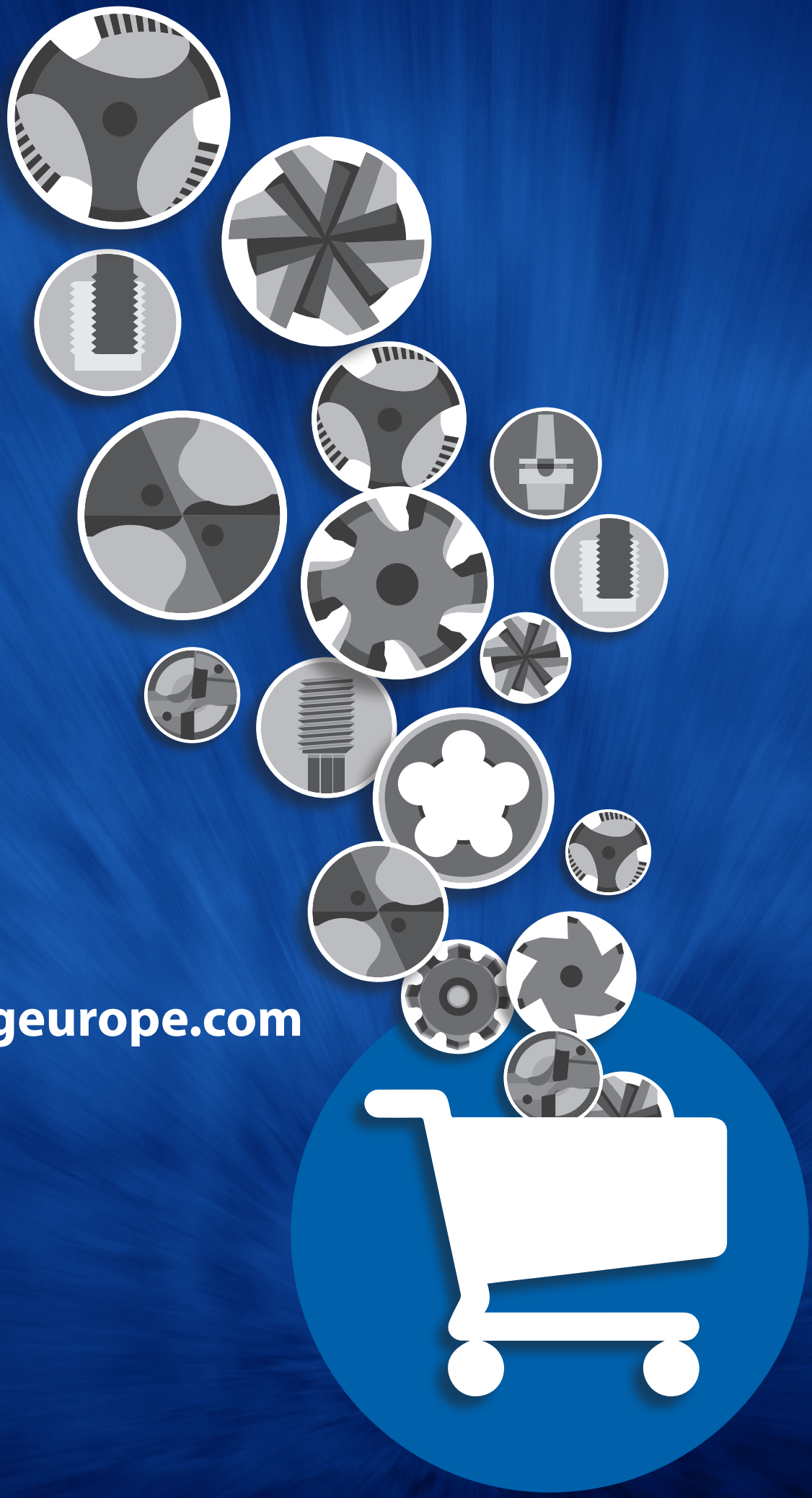

www.osgeurope.com

SWEDEN

Branch office of OSG SCANDINAVIA
Singelgatan 7
212 28 Malmö
Sweden
Tel: +46 40 41 22 55
osg@osg-scandinavia.com

OSG SCANDINAVIA

(For Scandinavian countries)
Langebjergvaenget 16
4000 Roskilde
Denmark
Tel: +45 46 75 65 55
osg@osg-scandinavia.com

OSG NETHERLANDS

Bedrijfsweg 5
3481 MG Harmelen
The Netherlands
Tel: +31 348 44 2764
info@osg-nl.com

OSG UK

Kelsey Close, Attleborough Fields Ind Est,
CV11 6RS, Nuneaton
United Kingdom
Tel: +44 (0) 1827 720 013
uk_sales@osg-uk.com

OSG EUROPE LOGISTICS

Avenue Lavoisier 1
B-1300 Z.I. Wavre - Nord
Belgium
Tel: +32 10 23 05 07
info@osgeurope.com

OSG BELUX
Avenue Lavoisier 1
B-1300 Z.I. Wavre - Nord
Belgium
Tel: +32 10 23 05 11
info@osg-belgium.com

OSG IBÉRICA

Bekolarra 4
E - 01010 Vitoria-Gasteiz
Spain
Tel: +34 945 242 400
osg.iberica@osg-ib.com

OSG FRANCE

Parc Icade, Paris Nord 2
Immeuble "Le Rimbaud"
22 Avenue des Nations
CS66191 - 93420 Villepinte
France
Tel: +33 1 49 90 10 10
sales@osg-france.com

OSG ITALY

Via Ferrero, 65 A/B
I - 10098 Rivoli
Italy
Tel: +39 0117705211
info@osg-italia.it

OSG IN EUROPE

CZECH REPUBLIC, SLOVAKIA, HUNGARY

OSG Europe Logistics S.A.
Slovakia, organizačná zložka
Račianska 22/A, Bratislava 831 02
Slovakia
Tel.: +421 24 32 91 295
info@osgeurope.com

OSG POLAND

ul. Spółdzielcza 57
05-074 Halinów
Polska
Tel: +22 760 82 71
Mob. +48 570 677 711
osg@osg-poland.com

OSG ROMANIA SRL

25C, Bucuresti-Magurele Street (Sector 5)
051431 Bucuresti
România
Tel: +40 21 322 07 47
info@osgromania.ro

OSG TURKEY

Rami Kişla Cad.No:56 Eyüp
Istanbul 34056
Turkey
Tel: +90 212 565 24 00
Fax: +90 212 565 44 00
info@osg-turkey.com

Vischer & Bolli AG

Machining and Workholding
Im Schossacher 17
CH-8600 Dübendorf
Switzerland
Tel.: +41 44 802 15 15
info@vb-tools.com

OSG GERMANY

Karl-Ehmann-Str. 25
D - 73037 Göppingen
Germany
Tel: +49 7161 6064 - 0
Fax: +49 7161 6064 - 444
info@osg-germany.de

shaping your dreams

OSG EUROPE LOGISTICS
Avenue Lavoisier 1
B-1300 Z.I. Wavre - Nord - Belgium
Tel: +32 10 23 05 07
info@osgeurope.com

OSG POLAND Sp. z.o.o.
Spółdzielcza 57
05-074 Halinów - Poland
Tel: +22 760 82 71
osg@osg-poland.com

OSG ROMANIA SRL
25C, Bucuresti-Magurele Street (Sector 5)
051431 Bucuresti - România
Tel: +40 21 322 07 47
info@osgromania.ro

OSG BELUX
Avenue Lavoisier 1
B-1300 Z.I. Wavre - Nord - Belgium
Tel: +32 10 23 05 11
info@osg-belgium.com

OSG GERMANY
Karl-Ehmann-Str. 25
D - 73037 Göppingen - Germany
Tel: +49 7161 6064 - 0
Fax: +49 7161 6064 - 444
info@osg-germany.de

AUSTRIA
Branch office of OSG GERMANY
Messestraße 11
A-6850 Dornbirn
Tel: +49 7161 6064-0
info@osg-germany.de

OSG FRANCE
Parc Icade, Paris Nord 2
Immeuble "Le Rimbaud"
22 Avenue des Nations
CS66191 - 93420 Villepinte - France
Tel: +33 1 49 90 10 10
sales@osg-france.com

OSG SCANDINAVIA
(For Scandinavian countries)
Langebjergvaenget 16
4000 Roskilde - Denmark
Tel: +45 46 75 65 55
osg@osg-scandinavia.com

OSG ITALIA
Via Ferrero, 65 A/B3
I - 10098 Rivoli - Italy
Tel: +39 0117705211
info@osg-italia.it

OSG NETHERLANDS
Bedrijfsweg 5 - 3481 MG Harmelen
Tel: +31 348 44 2764
info@osg-nl.com

SWEDEN
Branch office of OSG SCANDINAVIA
Singelgatan 7
212 28 Malmö - Sweden
Tel: +46 40 41 22 55
osg@osg-scandinavia.com

Vischer & Bolli AG
Machining and Workholding
Im Schossacher 17
CH-8600 Dübendorf
T +41 44 802 15 15
info@vb-tools.com

OSG UK
Kelsey Close, Attleborough Fields Ind Est,
CV11 6RS, Nuneaton, United Kingdom.
Tel: +44 1827 720 013
uk_sales@osg-uk.com

OSG IBERICA
Bekolarra 4
E - 01010 Vitoria-Gasteiz - Spain
Tel: +34 945 242 400
osg.iberica@osg-ib.com

CZECH, SLOVAKIA, HUNGARY
OSG Europe Logistics S.A.
Slovakia organizacna zlozka
Racianská 22/A, SK-83102 Bratislava
Slovakia
Tel. +421 24 32 91 295
Orders-osgsvk@osgeurope.com

OSG TURKEY
Rami Kişla Cad.No:56 Eyüp
Istanbul 34056 - Turkey
Tel+90 212 565 24 00
Fax: +90 212 565 44 00
info@osg-turkey.com

OSG EUROPE LOGISTICS S.A.

01/2024 - All rights reserved. © OSG Europe 2024

The contents of this catalogue are provided to you for viewing only. They are not intended for reproduction either in part or in whole in this or other medium. They cannot be copied, used to create derivation work or used for any reason, by means without the express, written permission of the copyright owner. If prices are stated, they are netto unit-prices and any eventual tax(es) have to be added. The company is not responsible for any printing error in technical, price and/or any other data.

Tool specifications subject to change without notice.

www.osgeurope.com